THIS IN-WALL TIMER. . . .
. . .is designed to be easily installed in an electrical junction box to replace a wall switch. The unique MULTIPLE Program feature enables the user to automatically turn lamps or appliances ON and OFF several times a day. Functioning as an "automatic" wall switch, it will follow a preset program and will repeat it every 24 hours. Nevertheless, the program can be easily changed, manually interrupted or suspended at any time.

HOW TO INSTALL. . .
1. Disconnect your electrical power for safety during installation.
2. Remove wall plate and disconnect light switch. **Make sure both "hot" and neutral wires are present in the junction box.** (See Fig. 1.). If both wires are not present, additional wiring will be necessary before installation can be completed.
3. Connect red timer wire to wire from fixture using wire connector. Connect black timer wire to the **"hot"** (usually black or red) wire in junction box using wire connector. Cut white wire in junction box (or open splice) and strip 1/2" of insulation on both wires. Connect white timer wire to white wires in junction box using wire connector. (See Fig. 2)
4. If the wall switch you are replacing had separate grounding conductors connected to the **GREEN** screw on the switch, make sure these wires are now securely connected to the **METAL** wall box, or, if your box is non-metallic (plastic) the wires are securely tied together.
5. Check that all wire connections are secure.
6. Place all wires inside junction box. Fit timer over junction box first, making sure that all wires and wire nuts clear the back of timer motor. DO NOT FORCE. Next, install timer using (2) mounting screws furnished.
7. Reconnect your electrical power. Set timer - see operating instructions.

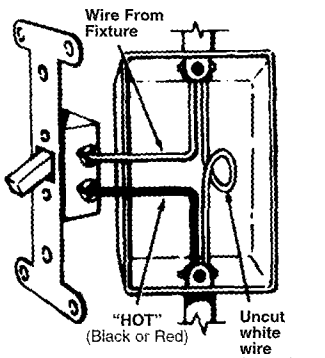

FIGURE 1

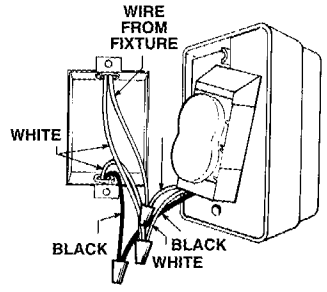

FIGURE 2

FULL ONE YEAR WARRANTY

If within one (1) year from the date of purchase, this product fails due to a defect in material or workmanship, Intermatic Incorporated will repair or replace it free of charge. The warranty does not apply to: (a) damage caused by accident, abuse, mishandling, dropping; (b) units which have been subject to unauthorized repair, opened, taken apart; (c) units not used in accordance with directions; (d) damages exceeding the cost of the unit. Some states do not allow a limitation of damages, so the foregoing limitation may not apply to you. This warranty gives you specific legal rights, and you may also have other rights which vary from state to state.

This warranty service is available by either (a) returning the product to the dealer from whom the unit was purchased, or (b) mailing postage prepaid to the nearest authorized service station listed below. Please be sure to wrap the product securely when mailing to avoid shipping damage. This warranty is made by:

Intermatic Incorporated / After Sales Service,
7777 Winn Rd., Spring Grove, IL 60081-9698 / 815-675-7000
http://www.intermatic.com

All wiring and installation must conform to national and / or local electrical codes.

How to install and operate your NEW

INTERMATIC®

24 HOUR automatic in-wall multiple program timer

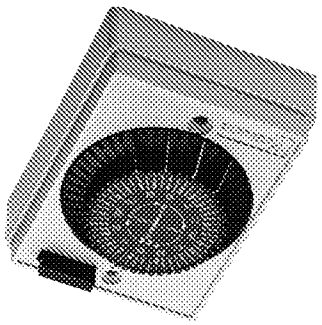

model: E-1020

FOR SINGLE POLE WALL SWITCH
APPLICATION/REPLACEMENT ONLY
RATED: 15 AMP. MAXIMUM. 12 AMP.
(1500 WATT) TUNGSTEN, 12 FULL LOAD
AMPERES - 125 VOLTS, 60 HZ.

c SR us

158EB10739

INTERMATIC INCORPORATED
SPRING GROVE, ILLINOIS 60081-9698

CAUTION: WATTAGE OF LAMPS OR APPLIANCES BEING CONTROLLED SHOULD NOT EXCEED CAPACITY OF TIMER.

HOW TO OPERATE YOUR TIMER. . . .

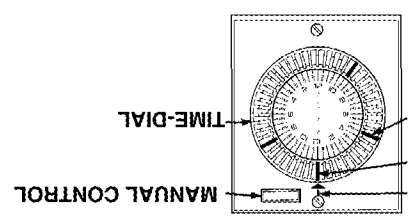

FOR AUTOMATIC PROGRAMMING: (REPEATS EVERY 24 HOURS)

1. GRASP TIME-DIAL FIRMLY, **PULL** AND REMOVE COMPLETELY FROM TIMER.
2. REMOVE ALL **ON** TRIPPERS (SILVER) AND **OFF** TRIPPERS (BRASS).

3. **TO PROGRAM TIMER:** *FIRST,* INSERT **OFF** TRIPPERS (BRASS) IN SLOTS FOR DESIRED **OFF** TIMES, BUT **NOT CLOSER** THAN 2 HOURS APART. SECOND, INSERT **ON** TRIPPERS (SILVER) IN SLOTS FOR DESIRED **ON** TIMES, BUT **NOT CLOSER** THAN 2 HOURS APART. **ON** AND **OFF** TRIPPERS MAY BE SPACED 1/2 HOUR APART FROM EACH OTHER.
4. REPLACE TIME DIAL. **PUSH IN FIRMLY.** *IF ANY TRIPPERS ARE NEAR THE TIME-LINE, ROTATE TIME-DIAL TO AVOID TO SECURE EXTRA TRIPPERS ORDER NO., 156EB1945A. FOR A SET OF 2 ON AND 2 OFF TRIPPERS.*
5. TURN TIME DIAL CLOCKWISE ONE OR MORE REVOLUTIONS UNTIL CORRECT TIME-OF-DAY IS OPPOSITE TIME-LINE.

INTERFERENCE WITH MECHANISM INSIDE.

- **TO TURN LAMP OR APPLIANCE ON OR OFF** MANUALLY AT ANY TIME, USE MANUAL CONTROL AS INDICATED. THIS WILL NOT EFFECT NEXT AUTOMATIC OPERATION.
- **TO STOP AUTOMATIC OPERATION,** (BUT KEEP TIMER RUNNING) **PULL** OUTWARD ON TIME DIAL UNTIL IT CLICKS.
- **TO RESUME AUTOMATIC OPERATION,** PUSH INWARD ON TIME-DIAL.