LEVITON®

decora®

Timer Switches for Energy Management

VPT24-1P

LTB30-1L

LTT60-1L

6651

6652

Better than ever – Leviton Decora Timer Switches offer advanced features, superior accuracy and contemporary aesthetics. Our robust selection provides convenient timed control of lighting and motor loads in homes, offices, schools, hotel rooms and other small commercial applications. An easy upgrade, automatic timers help reduce energy costs, improve security and add convenience. Homeowners can set lights to turn on and off for a lived-in look while they are away, or automate control of heat lamps, pool pumps or bathroom fans. Our versatile selection includes fully programmable and preset timers in popular styles and colors. All are backed by Leviton's long history of quality and reliability.

APPLICATIONS

- Residential/commercial indoor, outdoor and holiday lighting
- Ventilation, exhaust, attic and ceiling fans
- Heaters, heat lamps, pool filters and hot tubs

FEATURES AND BENEFITS

- Single pole or 3-way applications (most models)
- Replaces a standard wall switch (neutral required for select models)
- Soothing green LEDs
- Coordinates with Decora screwless wallplates

New Vizia +® 24-Hour Programmable Timer Switch
For indoor/outdoor lighting, fans and pool filters

- Easy to program and operate
- Timer settings at a glance with large, back-lit display
- Flexibility to program all days, weekdays, weekends or any combination of days
- Astronomical clock automatically adjusts to local sunrise/sunset times
- Automatic daylight savings time option
- Rechargeable battery keeps time during temporary power outages
- Three colors in one box
- Color change kits available

New 5-Button Decora Timer Switches (neutral required)
For lighting, heat lamps, hot tubs, attic and exhaust fans

- Improved 15-, 30-, or 60-minute timers, plus 12- and new 2-hour options
- Four preset buttons and OFF
- Simple press and hold override timer function
- Flexibility to program timer to convert to any other timer interval
- Color/Timer change kits available
- Three colors in one box

New 5-Button Decora Timer Switches
For incandescent indoor and outdoor lighting

- 30- or 60-minute timers
- Four present buttons and OFF
- Simple press and hold override timer function

14-Hour Programmable Timer Switch
For residential incandescent indoor/outdoor and seasonal lighting

- Automatic and manual ON/OFF control option
- 14 hour program capability in 1 hour increments
- Program repeats daily
- Battery backup protects memory in event of power outage

Countdown Timer Switch
For residential/light commercial indoor/outdoor lighting, office lights and ceiling fans

- Simple rotary dial time selection of settings, from 1 minute to 18 hours
- Automatic and manual ON/OFF control option
- Illuminated LED indicates load is ON
- Blinking LED accompanied by annunciator sound indicates end of time cycle

SPECIFICATIONS

Operating Temperatures
0° C to 40° C

Leviton Mfg. Co., Inc.
201 North Service Road Melville, NY 11747 Tech Line: 1-800-824-3005 Fax: 1-800-832-9538 www.leviton.com
© 2009 Leviton Manufacturing Co., Inc. All rights reserved. Subject to change without notice.

AGENCY STANDARDS AND COMPLIANCE

- Complies with FCC Part 15, Class B
- CSA Certified (File #152105)
- UL Listed VPT24, LTBxx Series and LTTxx Series (File #E-328809)
- UL Listed 6651 and 6652 (File #E-148771)

WARRANTY INFORMATION

- Limited Five-Year Warranty

DIMENSIONAL DRAWINGS

VPT24-1P

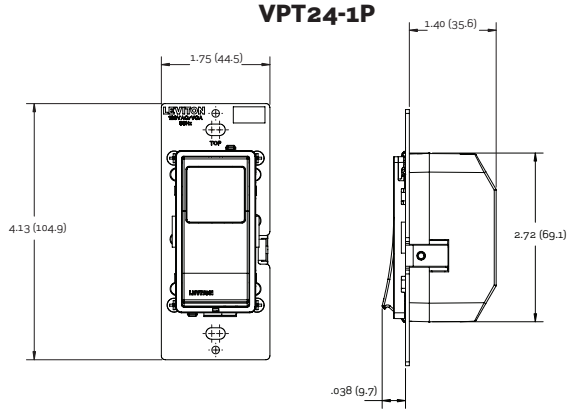

LTBxx-1L Series

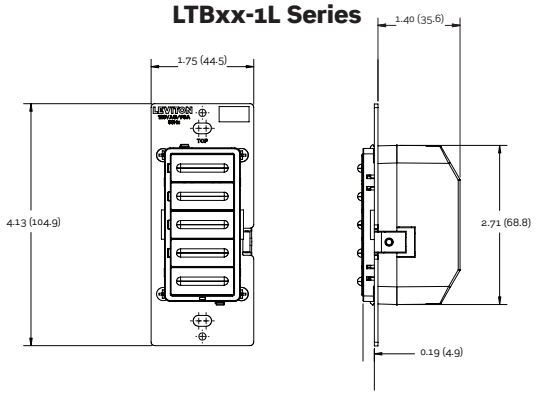

LTTxx-1L Series

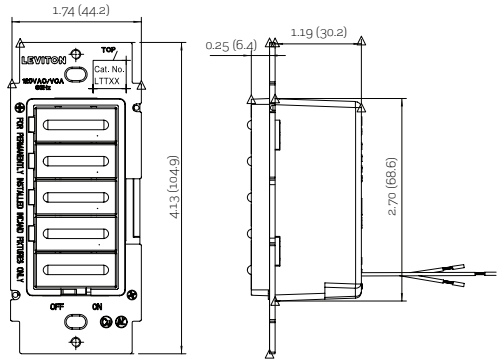

6651/6652

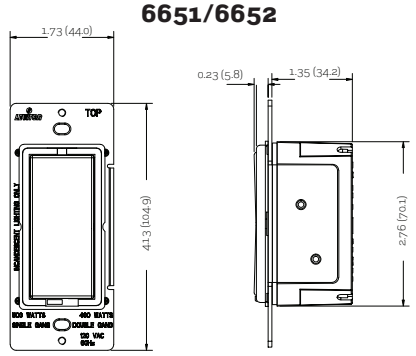

*6651 Shown

WIRING DIAGRAMS

Vizia + Programmable Timer Switch

VPT24-1P
Single Pole Wiring Application

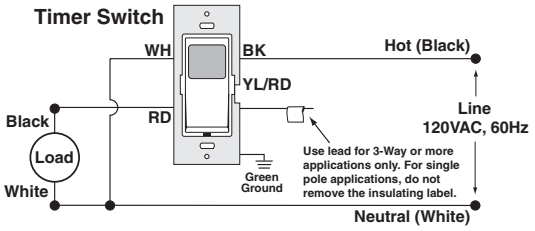

VPT24-1P
3-Way Wiring with Coordinating Remote Switch, VP0SR-10 (no LED) Application

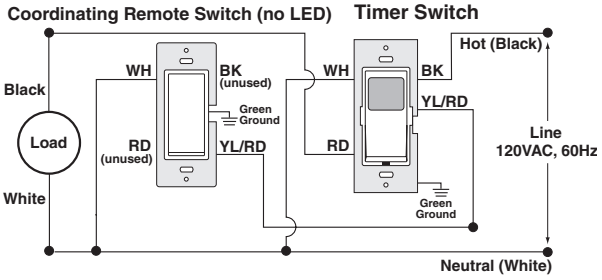

VPT24-1P
3-Way Wiring with Matching Remote Switch, VP0SR-1L (w/LED) Application

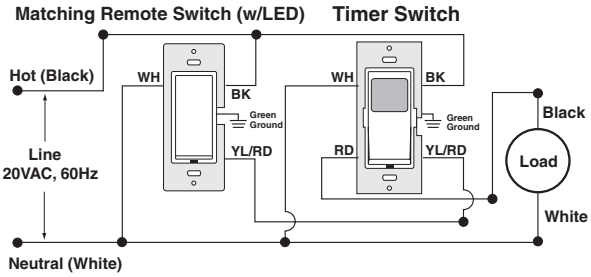

Leviton Mfg. Co., Inc.
201 North Service Road Melville, NY 11747 Tech Line: 1-800-824-3005 Fax: 1-800-832-9538 www.leviton.com
© 2009 Leviton Manufacturing Co., Inc. All rights reserved. Subject to change without notice.

WIRING DIAGRAMS
5-Button Timer Switches

LTBxx Series
Single Pole Wiring Application

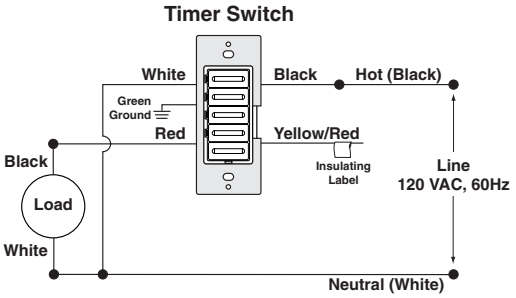

LTBxx Series
3-Way Wiring with Coordinating Remote Switch, VP0SR-10 (no LED) Application

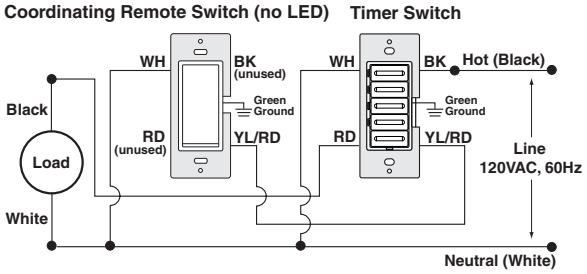

LTBxx Series
3-Way Wiring with Matching Remote Switch, VP0SR-1L (w/LED) Application

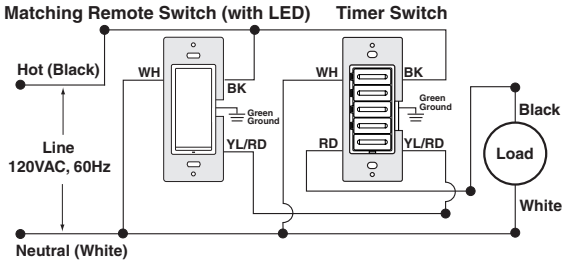

LTTxx Series
Single Pole Wiring Application

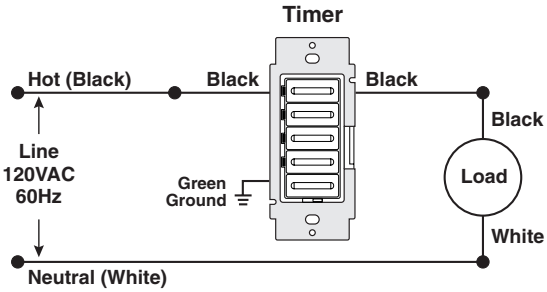

6651/6652

Single Pole Wiring Application

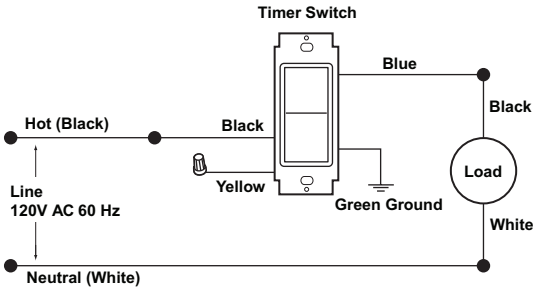

3-Way Wiring with a 3-Way Switch

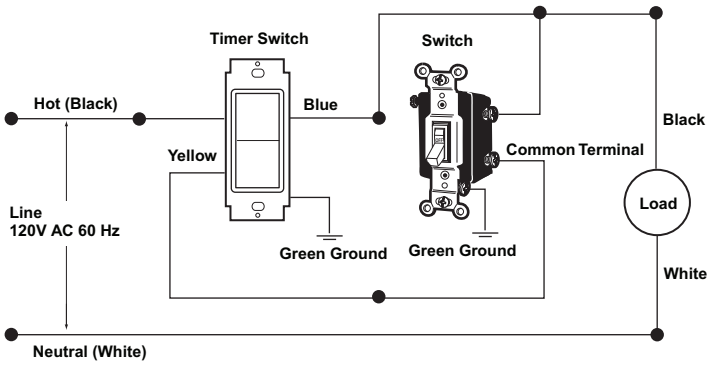

Leviton Mfg. Co., Inc.
201 North Service Road Melville, NY 11747 Tech Line: 1-800-824-3005 Fax: 1-800-832-9538 www.leviton.com
© 2009 Leviton Manufacturing Co., Inc. All rights reserved. Subject to change without notice.

LEVITON®

Decora® Timer Switches for Energy Management

DERATING/MAXIMUM CAPACITY

In multi-gang installations, all devices must be derated in accordance with the following chart:

Cat No.	Single Gang	Double Gang	Triple Gang or More
VPT24-1P	No derating required	No derating required	No derating required
6651	No derating required	No derating required	No derating required
6652	No derating required	No derating required	No derating required
LTBxx Series	Resistive: 20A (2400W) Incandescent: 1800W Inductive: 20A, Motor: 1HP	Resistive: 16A (1920W) Incandescent: 1800W Inductive: 16A, Motor: 1HP	Resistive: 16A (1920W) Incandescent: 1800W Inductive: 16A, Motor: 1HP
LTTxx Series	600W	500W	400W

ORDERING INFORMATION

Decora® Timer Switches - Programmable Electronic Timer Switches, Single Pole or 3-Way

Cat. No.	Description	Rating	Color*
VPT24-1L	Vizia +® 24 Hour, with astronomical clock; neutral required	1800W Incandescent, 15A Resistive/ Inductive, 1 HP @ 120VAC	Z
6651	14 hour programmable in 1 hour intervals	500W Incandescent @ 120VAC	W, I
6652	Variable countdown, 1 minute to 18 hour intervals, neutral required	500W Incandescent, 500VA Rapid Start Ballasts only 1/6 HP 120VAC 60 Hz	W, I, A

5-Button Timer Switches - Four Preset Buttons and OFF

Single Pole or 3-Way, Neutral Required, 1800W Incandescent, 20A Resistive/Inductive, 1 HP @ 120VAC

Cat. No.	Description	Interval	Color*
LTB15-1L	15 minute	2-5-10-15 minutes	Z
LTB30-1L	30 minute	5-10-15-30 minutes	Z
LTB60-1L	60 minute	10-20-30-60 minutes	Z
LTB02-1L	2 hour, Title 24 Compliant	15M-30M-1H-2 hours	Z
LTB12-1L	12 hour	2-4-8-12 hours	Z

Single Pole, Neutral Not Required, 600W Incandescent, 5A Resistive

Cat. No.	Description	Interval	Color*
LTT30	30 minute	5-10-15-30 minutes	I, W, T
LTT60	60 minute	10-20-30-60 minutes	I, W, T

Color Change Kits

Cat. No.	Description	Color*
VPTKT	Vizia + 24 Hour Timer Color Change Kit	W, I, T, G, E, B
LTBKT	5-Button Timer Color Change Kit	W, I, T, E, B

*To order colors, add suffix to basic Cat. No. White (-W), Ivory (-I), Light Almond (-T).
Products with suffix –Z are packaged 3 colors in a box: White, Ivory and Light Almond.

Color Change Kits in White (-W), Ivory (-I), Light Almond (-T), Gray (-G), Black (-E), Brown (-B).

Leviton Manufacturing Co., Inc.
201 North Service Road, Melville, NY 11747-3138
Telephone: 1-800-323-8920 • Fax: 1-800-832-9538 • Tech Line: (8:30AM-7:00PM E.T. Monday-Friday): 1-800-824-3005

Leviton Manufacturing of Canada, Ltd.
165 Hymus Boulevard, Pointe Claire, Quebec H9R 1E9 • Telephone: 1-800-469-7890 • Fax: 1-800-563-1853

Leviton S. de R.L. de C.V.
Lago Tana 43, Mexico DF, Mexico CP 11290 • Tel. (+52) 55-5082-1040 • Fax. (+52) 5386-1797 • www.leviton.com.mx

Decora and Vizia + are registered trademarks of Leviton Manufacturing Co., Inc.

Visit our website at www.leviton.com

© 2009 Leviton Manufacturing Co., Inc. All rights reserved. Subject to change without notice.

ISO 9001 REGISTERED Quality Manufacturer