WPLED10SW

JOB NAME: _____

DATE: _____

TYPE: _____

DESCRIPTION

LED 10 Watt Wallpacks

SPECIFICATIONS

Dark Sky Approved:
The International Dark Sky Association has approved this product as a full cutoff, fully shielded luminaire.

Finish:
Chip and fade resistant polyester powder coat finish.

For use on LEED Buildings:
IDA Dark Sky Approval means that this fixture can be used to achieve LEED Credits for Light Pollution Reduction.

Gaskets:
High Temperature Silicone

IESNA LM-79:
RAB LED luminaires comply with the IESNA LM-79 testing procedure, which measures performance qualities of LED luminaires to allow for a true comparison of luminaires regardless of the light source.

Patents:
The design of the LPACK is protected by U.S. Pat. D604,004 and patents pending in Canada, China and Taiwan.

UL Listing:
Suitable for wet locations. Suitable for mounting within 4' of the ground.

Warranty:
RAB LED fixtures give you peace of mind because both the fixture and light engine components are backed by RAB's 5 Year Warranty. For more information,

California Title 24:
LPACK complies with California Title 24 building and electrical codes.

Color Accuracy:
92 CRI

Fixture Efficacy:
41 Lumens per Watt

Green Technology:
RAB LEDs are Mercury and UV free.

Heatsink:
Cast aluminum thermal management system for optimal heat sinking. The LPACK is designed for cool operation, most efficient output and maximum LED life by minimizing LED junction temperature.

Housing:
Precision die cast aluminum housing, lens frame.

IESNA LM-79 & IESNA LM-80 Testing:
RAB LED luminaires have been tested by an independent laboratory in accordance with IESNA LM-79 and have received the Department of Energy "Lighting Facts" label.

LED Light Engine:
Multi-chip 10W high output long life LED
Driver: Constant Current, Class II, 120V-240V, 50/6/ Hz, 350mA

Light Color:
5250 K (Daylight)

Lumen Maintenance:
The LED will deliver 70% of its initial lumens at 50,000 hours of operation.

Mounting:
Junction box and surface mount.

Color:
White

Weight:
3.5

DIMENSIONS

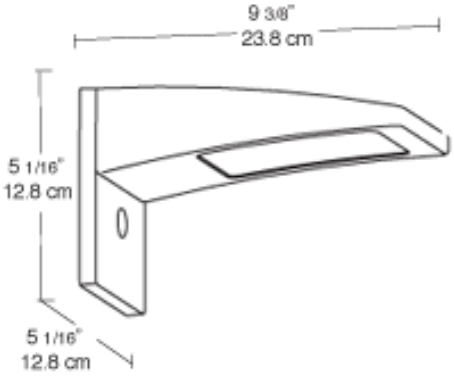

ORDERING INFORMATION

	Total Watts	Lamp Type	Lamp Base	Ballast	Starting Amps/ Operating Amps 120V	208V	240V	277V	Input Watts	LAMP ANSI	Initial Lumens	Lamp Hours
LED Lamp supplied with fixture	10	Light Emitting Diode	Thermal Heatsink	Constant Current	.43 A/.43 A	.43 A/.43 A	.43 A/.43 A	N/A	13	N/A	547	50000
Factory Installed Options Add suffix to Catalog Number	Photocontrol for 277V (/PC2)				Photocontrol for 120V (/PC)							

Note: Specifications may change without notice

RAB Lighting, Inc. • 170 Ludlow Ave• Northvale, NJ 07647 • Tel: 888 RAB-1000 • Fax: 888 RAB-1232 • www.rabweb.com

© 2010 RAB Lighting, Inc.