IMPORTANT SAFEGUARDS

1. READ AND FOLLOW ALL SAFETY INSTRUCTIONS.
2. Do not use outdoors.
3. Do not let power supply cords touch hot surfaces.
4. Do not mount near gas or electric heaters.
5. Use caution when servicing batteries. Battery acid can cause burns to skin and eyes. If acid is spilled on skin or in eyes, flush acid with fresh water and contact a physician immediately.
6. Equipment should be mounted in location and at heights where it will not readily be subject to tampering by unauthorized personnel.
7. The use of accessory equipment not recommended by the manufacturer may cause an unsafe condition.
8. Do not use this equipment for other than intended use.
9. All servicing should be performed by qualified personnel only.
10. Allow battery to charge for 24 hours before first use.

SAVE THESE INSTRUCTIONS

UNPACK THE FIXTURE

Check the contents of the box. You should receive:

1 - Plastic housing	2 - EXIT panels
1 - Back panel	1 - Mounting plate
1 - Canopy	1 - Hardware package

NOTE: First turn off electricity.

Wall Mounting

1. Remove EXIT panel (2) with screwdriver. (See Fig. 1)
2. Remove 3/8" hole plug from the center of back plate (11). Drill Φ1/4" holes into the oblong knock outs on the back plate that correspond to the junction box holes to be used.
3. Feed AC supply leads through center hole and make proper connections. See "ELECTRICAL CONNECTIONS" below.
4. Feed excess wire into junction box and secure the back plate to the junction box.
5. Connect red battery wire to battery + terminal. Refer Fig.3 to remove and replace the battery in the plastic housing. (If remote capability is required, refer to "FOR REMOTE CAPABILITY" below)
6. Snap in Arrows (3) on Exit panel as required and keep unused arrows in a safe place.
7. Snap EXIT panel to the housing.

Ceiling Mounting

1. Remove EXIT panel with screwdriver. (See Fig.1)
2. Attach crossbar(8) to the junction box using junction box screws.
3. Attach the canopy to the sign by inserting the canopy into sign at an angle, then twist to secure. (See Fig.4)
4. Feed AC supply leads through center hole and make proper connections. See "ELECTRICAL CONNECTIONS" below. Holding wire may be used for support during wiring. (See Fig.2)
5. Push excess wire into the junction box and align the holes in the canopy with those in the crossbar. Using screws and washers supplied, tighten canopy to crossbar so that the canopy is securely fastened and tight against the ceiling.
6. Connect the red battery wire to the battery + terminal. Refer Fig.3 to remove and replace the battery in the plastic housing. (If remote capability is required, refer to "FOR REMOTE CAPABILITY" below)
7. Snap in Arrows(3) on Exit panel as required, keep unused arrows in a safe place.
8. Snap EXIT panel to the housing.

Pendant Mounting (Pendant supplied by others)

1. Feed the stem with threaded end into the center hole on the top of the housing and fasten using nut (not provided). Take out LED strips carefully before placing the stem into the center hole and replace the LED strips back to the slot after installing the stem. (See Fig.5)
2. Connect and trim input wires to unit wires at upper left corner of housing. (See Fig.6) For proper wire connection, see "ELECTRICAL CONNECTIONS" below.
3. Connect the red battery wire to battery + terminal. Refer Fig.3 to remove and replace the battery in the plastic housing. (If remote capability is required, refer to "FOR REMOTE CAPABILITY" below)
4. Snap in Arrows(3) on Exit panel as required, keep unused arrows in a safe place.
5. Snap Exit panel to housing.

ELECTRICAL CONNECTIONS

Make the proper supply lead connections. If using 120VAC, connect the black and white leads to the building utility. If using 277VAC, connect the orange and white leads to the building utility. Cap off unused wire. In all cases, use standard wire nuts in connection to leads. (See Fig.7)

FOR REMOTE CAPABILITY

1. In order to use additional remote heads (6V 12W Max.), make the proper lead connections with remote head wires at junction box using remote load wires in the sign. (See Fig.8)
2. Connect additional 6V 4.5Ah battery (if not supplied) to the existing battery wiring harness (See Fig. 9). Then place supplied battery at right battery case and additional battery at left battery case. (See Fig.10). To remove and replace battery, refer to Fig.3

ALL SERVICING SHOULD BE PERFORMED BY QUALIFIED SERVICE PERSONNEL

WALL MOUNTING

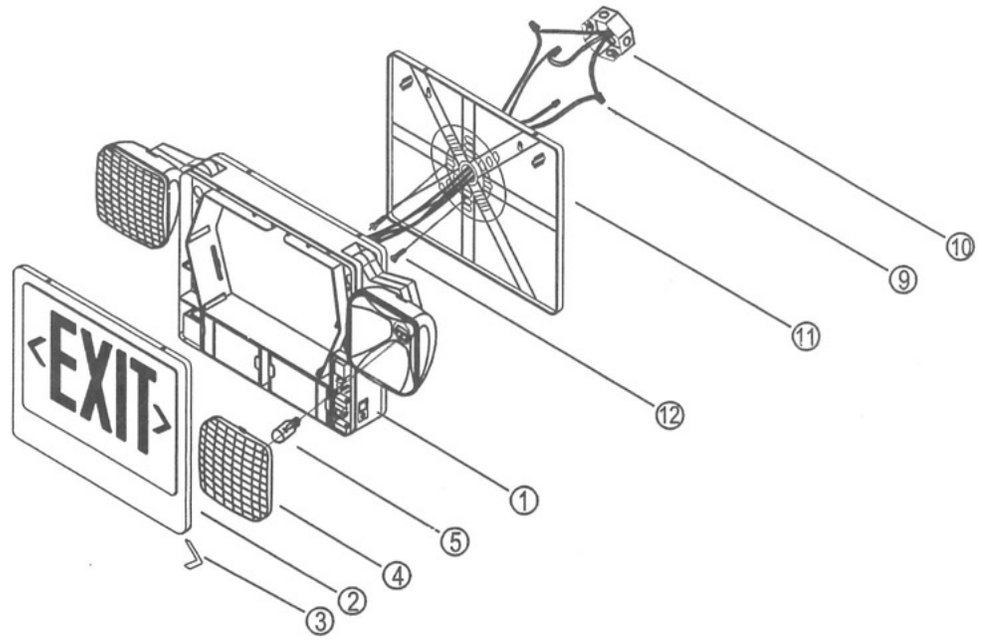

CEILING MOUNTING

PARTS DESCRIPTION

1) Plastic housing
2) EXIT panels
3) Arrow
4) Lens
5) Bulb
6) Canopy
7) Machine screw
8) Crossbar
9) Wire nuts
10) Junction box (building utility)
11) Back plate
12) Junction box screw
13) Nut (not provided)
14) Extension pipe (not provided)

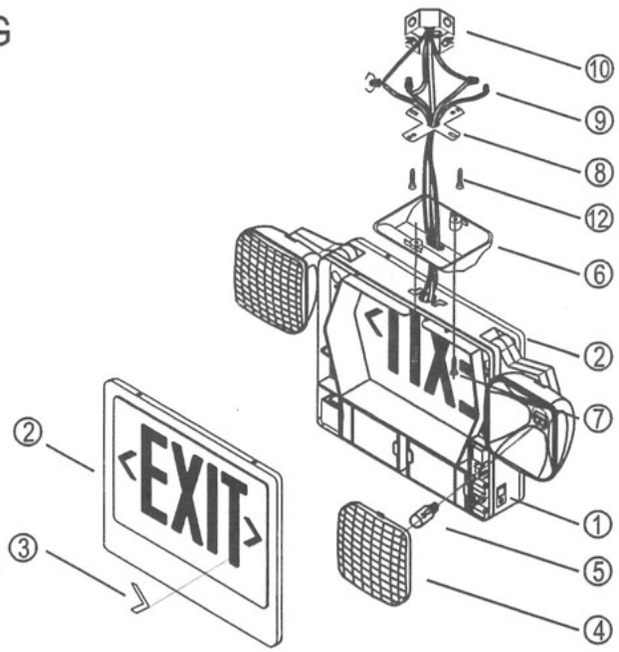

Using Finger press plastic housing

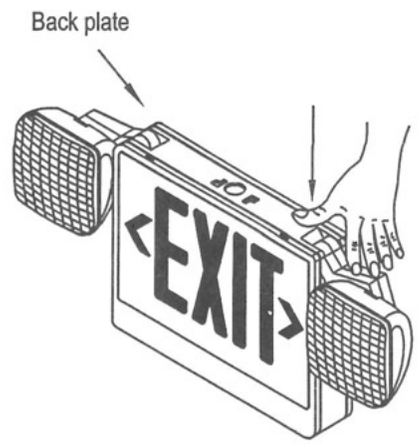

Fig. 11 Opening back plate

PENDANT MOUNTING

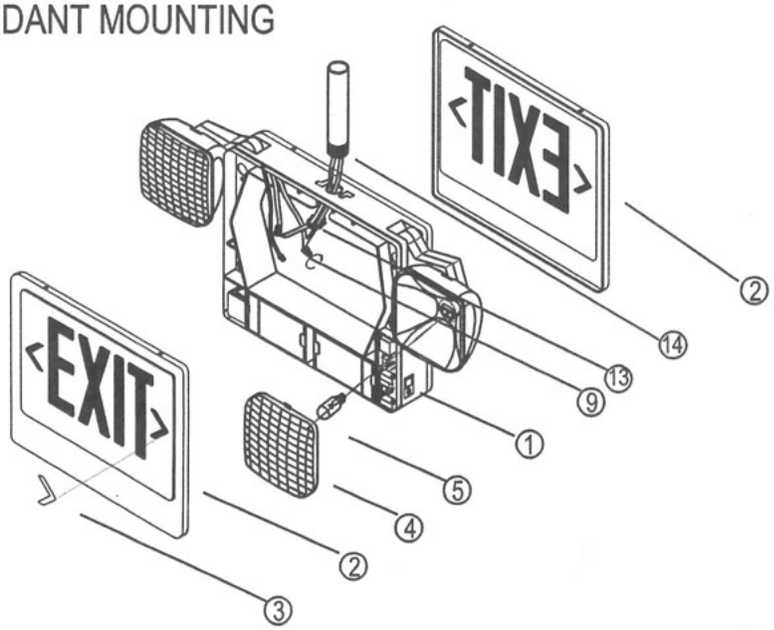

You can adjust position of light heads to get the best position of emergency lighting

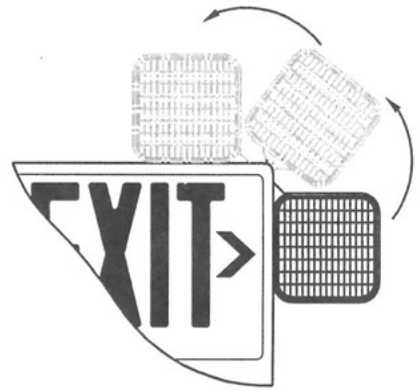

Fig. 12 Adjust position of emergency light heads

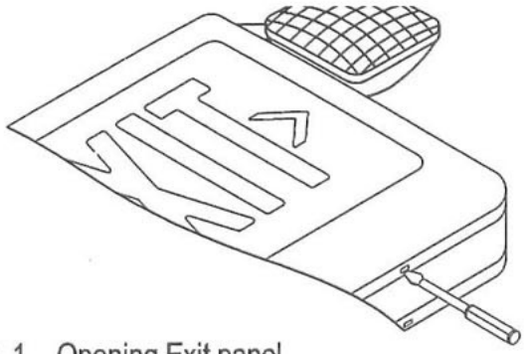

Fig. 1 Opening Exit panel

CAUTION: Holding wire supports sign during wiring

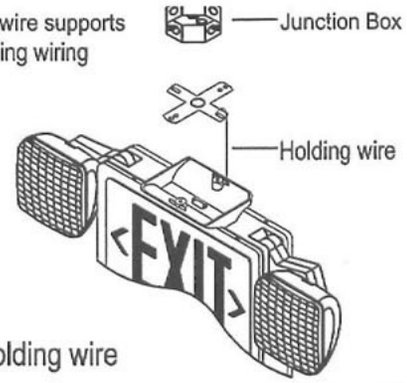

Fig. 2 Using holding wire

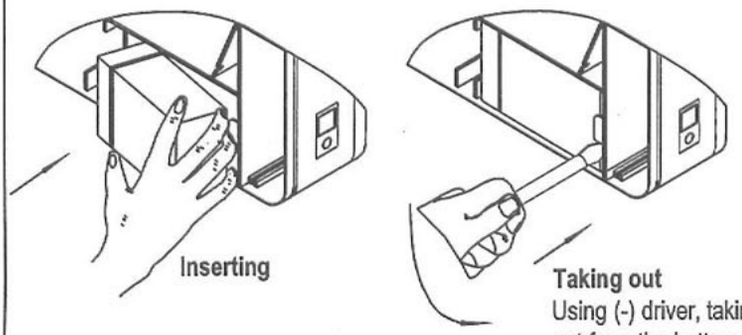

Taking out
Using (-) driver, taking out from the bottom

Fig. 3 Insering/Taking out battery

Insert canopy into housing at 20 degree and twist

Quick snap is now firmly locked

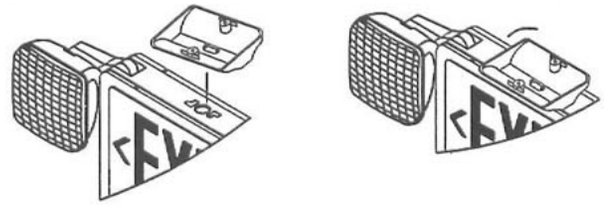

CAUTION: Trying to remove canoy after it is locked in place may cause damage

Fig. 4 Assembling canopy to housing

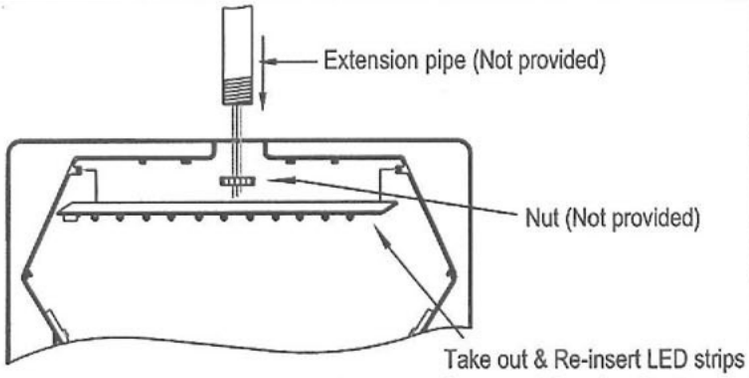

Fig. 5 For pendant mounting

Place connected wire at this position.

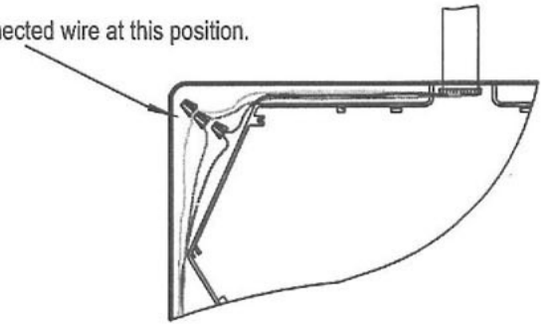

Fig. 6 Connect and trim wires

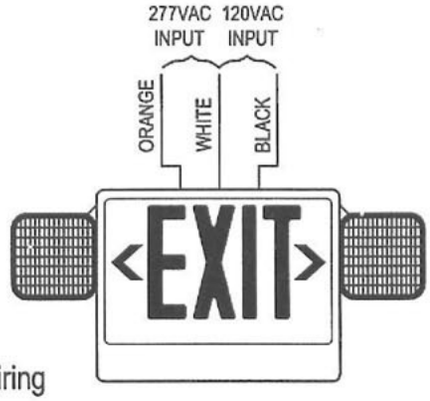

Fig. 7 Wiring

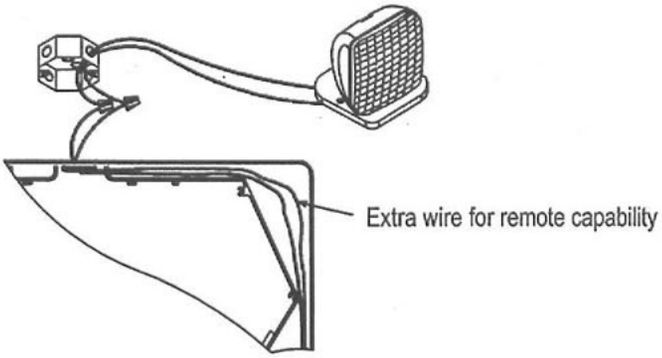

Fig. 8 Wiring for remote capability

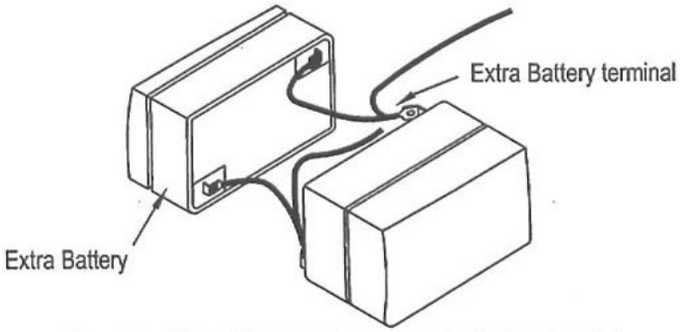

Connect additional battery wire using extra battery terminal

Fig. 9 Connecting additional battery for remote capability

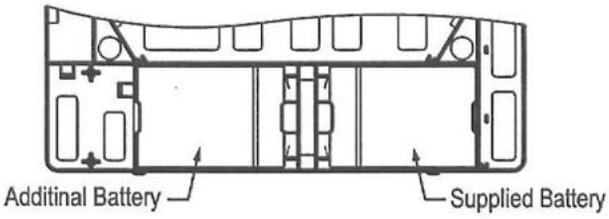

Fig. 10 Position for battery for remote capability